Absolute Encoder EAS38---RMB User Manual

- A "magnetic detection mode", with excellent impact and vibration resistance.
- Programmable, intelligent absolute value encoder; professional setting software, convenient for user operation.
- Wide operating voltage, low current consumption.
- Clamping flange, servo flange or blind hollow shaft, the international standard structure.
- External resetting line to set the default location, easy installation, no need to find ZERO.

★Please totally read the following instruction first for proper use of encoder.

Parameter

Operating Voltage	10-30Vdc or 5Vdc polarity protection
Current Consumption	< 40mA (24V power supply) no load
Output Signal	Modbus RTU output Settable for length/ angle /velocity measurement
Linearity Resolution	1/4096FS or 1/16384FS
Repeatability Precision Signal adjustment	Repeatability ±2BIT(Actual precision related with installation and shaft concentricity.) Resolution or direction settable, external setting line preset functiion.
Operating Temperature	-40—75℃ Programming temperature range：0℃～+70℃
Storage Temperature Protection class Vibration & shock	-40—80℃ IP67 for housing IP65 for shaft 20g，10～2000Hz；100g，6ms
Permissible Rotation Rate	2400rpm
Connection Cable	1m 8-core shielded cable.
Overall Feature	Clamping flange or synchronous flange, metal enclosure, sealed dual-bearing structure (see attached drawing of overall dimension)

Modbus RTU Factory Parameters：

Function code	parity	Baud rate	address	resolution	direction
04	even	9600	1	4096	CW

Connection

Signal	Vcc	GND	RS485 A	RS485 B	Reset	Permit
Color	Brown	white	Green	Yellow	Gray	Blue

Note: 1. How to use Programming-permit-line (Blue)

When setting the mode: the blue wire of the encoder and the brown wire are connected to the positive power+ together. At this time, the communication rate of the encoder is fixed at 19200bps.

Non-setting mode: In normal operation, it is recommended to connect the blue wire and the white wire together to the power ground.

2. How to use reset line (gray)

When the reset line (gray) connected to power+ for more than 1 second, the current data of the encoder becomes the reset value (the reset value of the encoder can be set arbitrarily)

The encoder can also be reset by using the instruction (for specific instructions, refer instance 2)

Installation dimensions (Unit: mm)

Clamping flange (default)

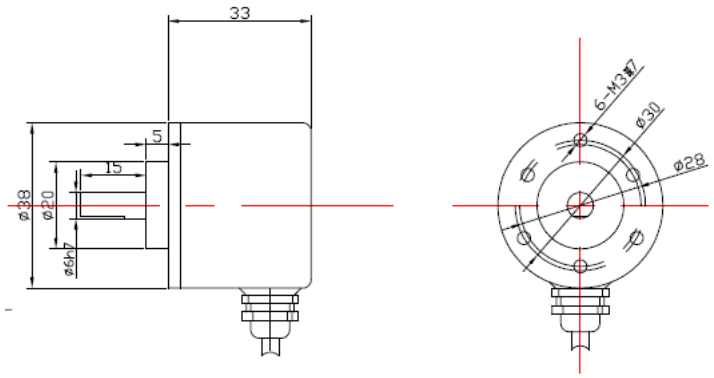

Synchronous flange

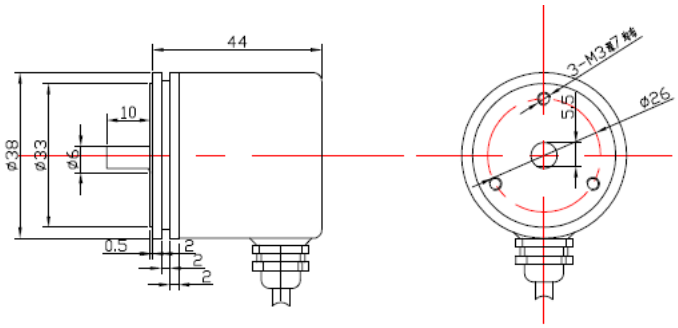

Blind hole

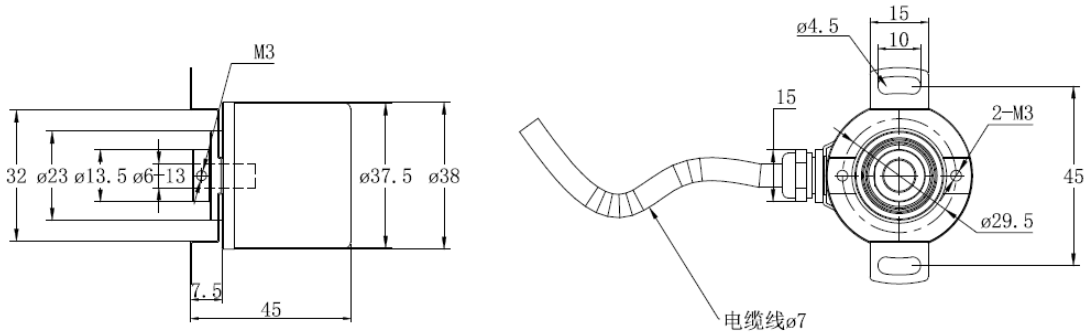

The Modbus communication protocol description:

Baud rate:. 4800bps 9600bps (default) 19200bps 38400bps 115200bps....

Frame format: 8 data bits, 1 stop bit, even parity, no flow control (Can be customized without parity, please inform when ordering)

Message format

Function code 03H: reads the parameter value

The requests of the master: address/ function code/ the address of the parameter/ the length of the data/ check code

The responses of the slave: address/ function code/the length of the byte /the parameter value/ check code

Function code 04H: read the measured values

The requests of the master: address/ function code/ the address of the data/ the length of the data/ check code

The responses of the slave: address/ function code/the length of the byte /the data information/ check code

Function code 10H: modify the parameter values

The requests of the master: address/ function code/the address of the parameter / the length of the data/ the length of the byte/ the parameter value / check code

The responses of the slave: address/ function code/ the address of the parameter / the length of the data / check code

The communication agreement between master-slave machines:

The master send each frame of data should contain the following information (hexadecimal)

The address of the slave / Function code/ Information words/Check code

Slave address (1 byte): the Slave's number of equipment. From the address of the slave, the master identify communication equipment. That set by the user address, slave will receive information sent by the master. In a Modbus network, each of the slave must have a unique address code, and can only respond to meet address code from the slave.

Function code (1 byte): The function code sent by the master to inform the slave what task to perform.

Information word (N bytes): Including different addresses of the data, the length of the data, and the data's information between the communications of the machines.

Check code (2 bytes): Because used to detect data communication is error, using cyclic redundancy CRC16 check.

Instance

1. **Reset command**

   Host sends 01H 05H 00H 00H check code

   Slave reply: 01H 05H 00H 00H check code

2. **Read the measurement data commands**

   Host sends 01 04 00 01 00 02 20 0B

   Note: 01 is encoder address , 04H is function code , 00H 01H is the data address , 00H 02H is data length , 20H 0BH is check code.

   Slave reply: 01H 04H 04H 00H 00H 01H 00H FAH 14H

   Note: 01 is encoder address, 04H is the function code, 04H is the data length, 00H 00H 01H 00H is the data, FAH 14H is check code.

   For encoder parameter setting, please use our company's special CALT software.

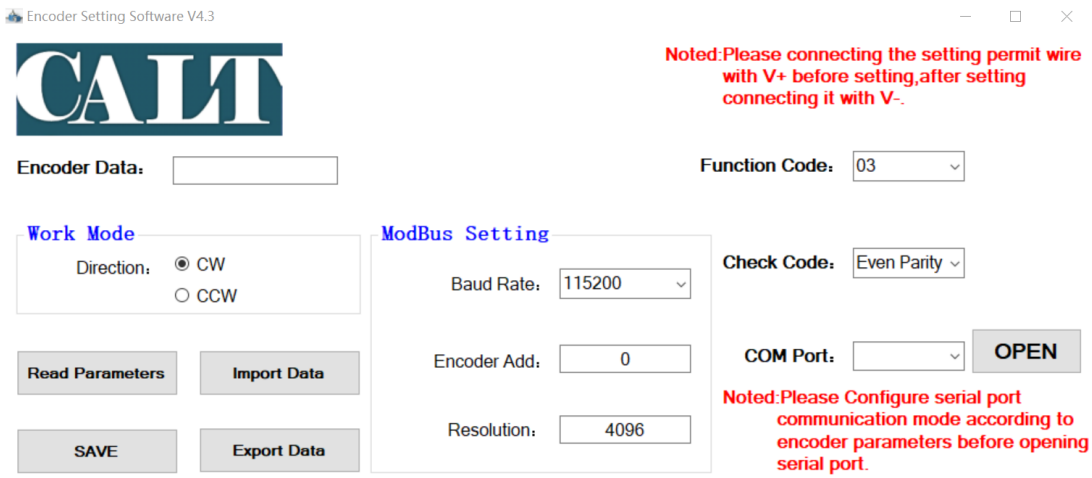

Operate instructions: (Before opening the serial port, please configure the serial port communication mode according to the encoder parameters)

1. Data direction

Clockwise: Encoder data increases when the encoder rotates clockwise facing the encoder shaft.

Counterclockwise: Encoder data increases when the encoder rotates counterclockwise facing the encoder shaft.

2. Baud rate:

Setting range: 4800 ---- 115200

3. Resolution: The data output by the encoder in one revolution

1--4096 can be set

4. Encoder address:

Setting range: 0--127

Read parameters:

That is to read the original parameters of the encoder

Save:

Write the currently modified parameters to the encoder.

Export parameters:

Store the parameter that has just been set to the place specified by the computer. In order to import the storage parameters directly in the future.

Import parameters:

Import the previously exported parameters into the software and use them.

Modbus communication considerations:

1. Communication speed and transmission distance is a contradiction. The higher the rate, the transmission distance is shorter, but more stable, and vice versa.

2. External reset line (gray wire) used to reset the encoder current position to presetting value. When using, the gray wire should connected to high level (24V). But after the completion of the operation, It's better to connect gray wire to power ground to avoid interference.

3. In the strong external electromagnetic interference, RS485 connection is best to use double-shielded cable.

4. When multiple encoders connect host, because of the encoder have no parity, it is suggested that when the PC programming in time to distinguish between the various encoder data returned.

5. When the system has a motor, encoder power supply should be isolated from other.

Since RS485 circuit is a differential form, A, B are two signal lines with voltage, often times connect to ground or high level, RS485 circuit will cause damage

SHANGHAI QIYI CO., LTD